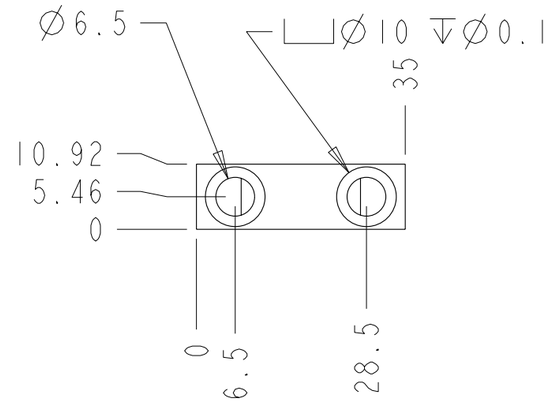
Ø6.5
⌴Ø10 ↧Ø0.1
35
10.92
5.46
0
0
6.5
28.5

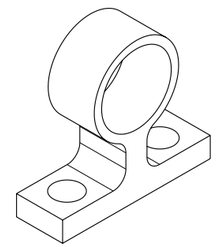

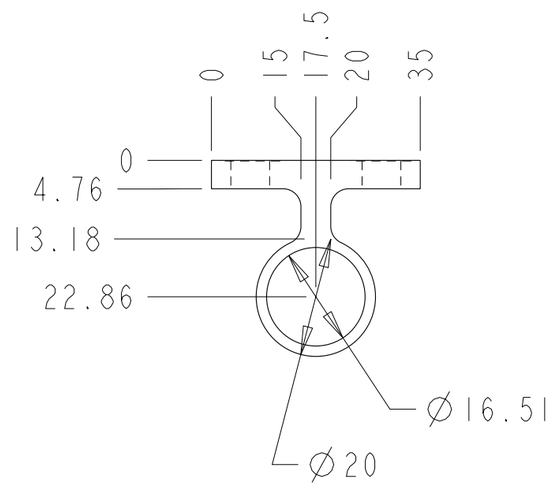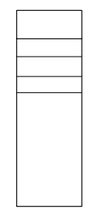
0
15
17.5
20
35
0
4.76
13.18
22.86
Ø16.51
Ø20